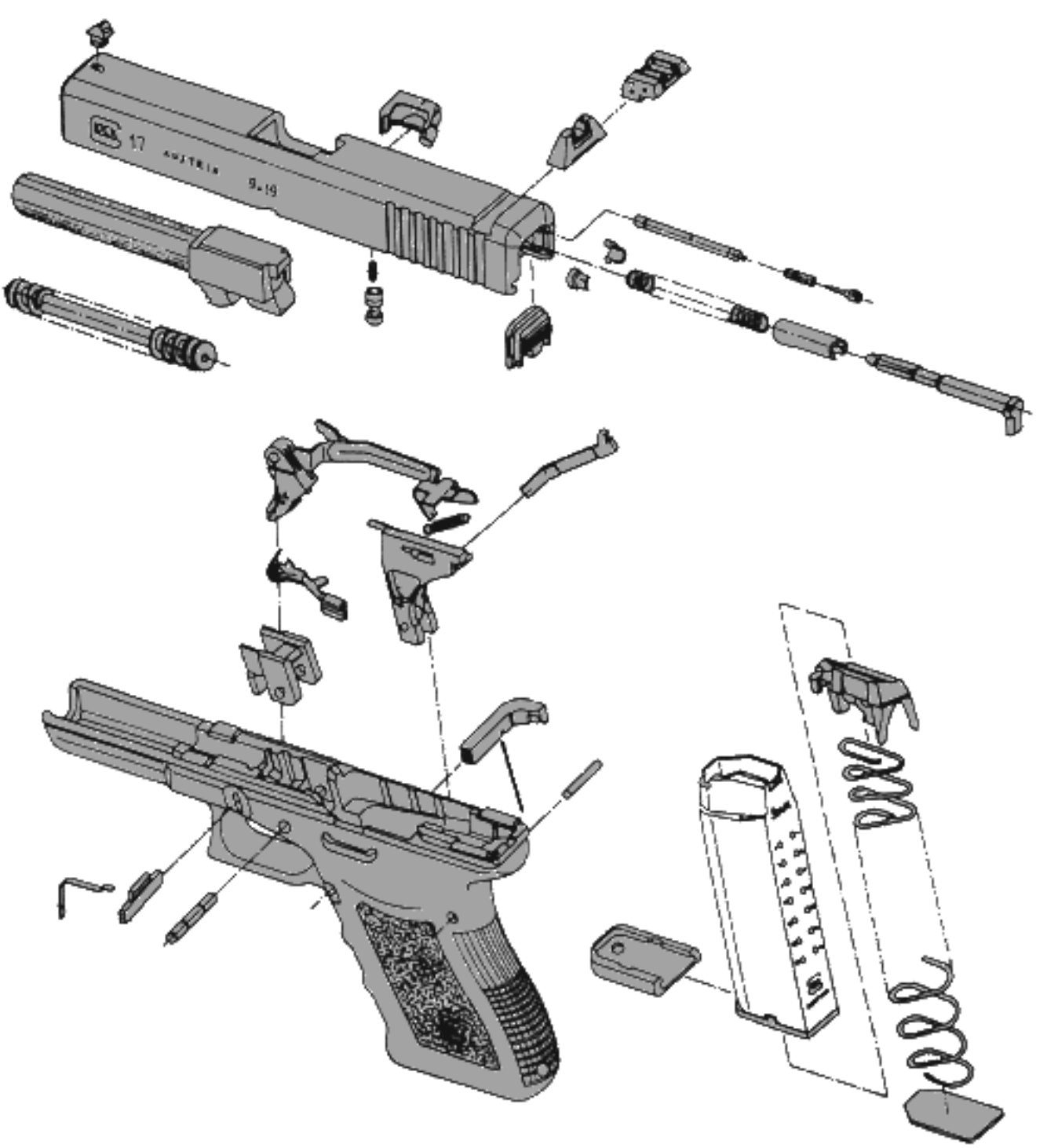
17
AUSTRIA
9x19